Stirring-Up Trouble

Hidden Challenges in Stirred Measurements Based on Simple DUT Failure Models

John Ladbury

RF Fields Group, NIST

Boulder, CO USA

October 30-31, 2018

Outline

- Reverberation Chamber Basics
- DO-160 Section 20.6 and IEC 61000-4-21 Harmonization
- Stirring vs. Tuning
- Response Times
- Problem EUTs for stirring.
- Conclusion

Reverberation Chamber Calibration

- 8 or 9 probe locations
- 3 orthogonal sensors/probe
- ***Stepped*** paddle
- *N* paddle positions
- Our Focus is Radiated Immunity

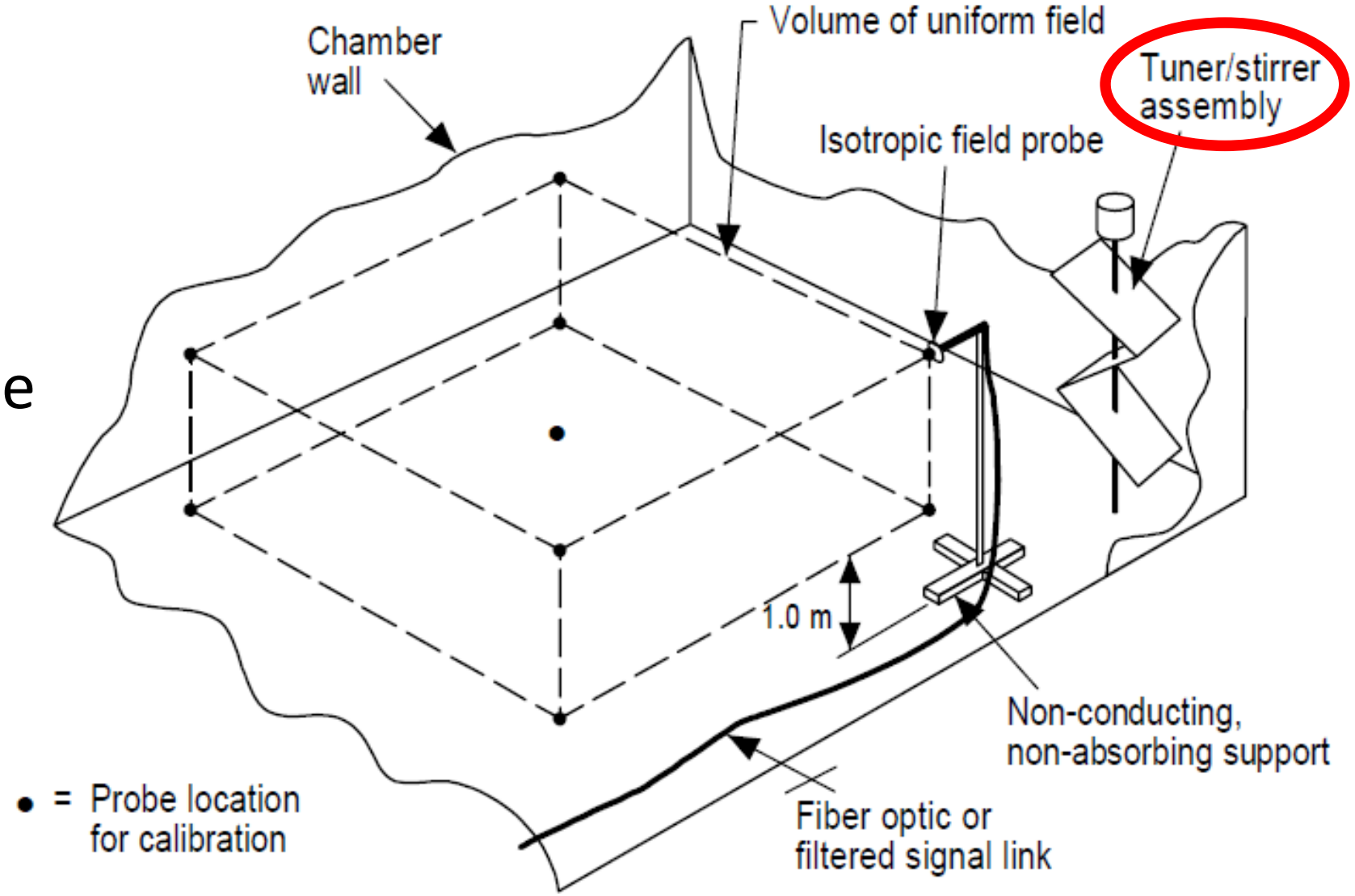

Reverb Chamber Measurement

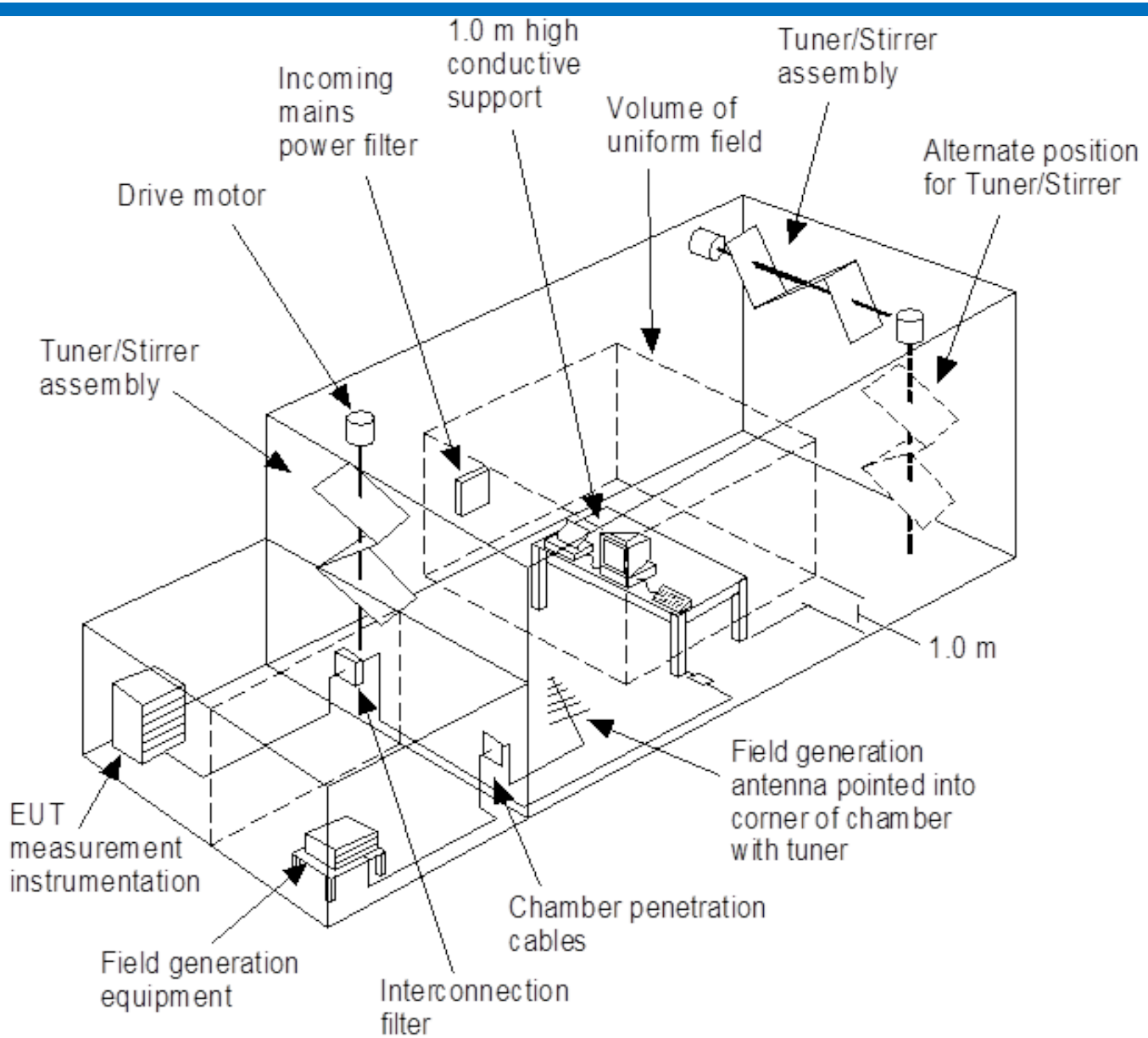

Possibly stepped (tuned) or stirred.

Stepped: multiple individual stationary (fixed) paddle positions

Stirred: continuous motion, ~2 – 4 RPM (15 to 30 s/rev)

Reverb Chamber Measurement

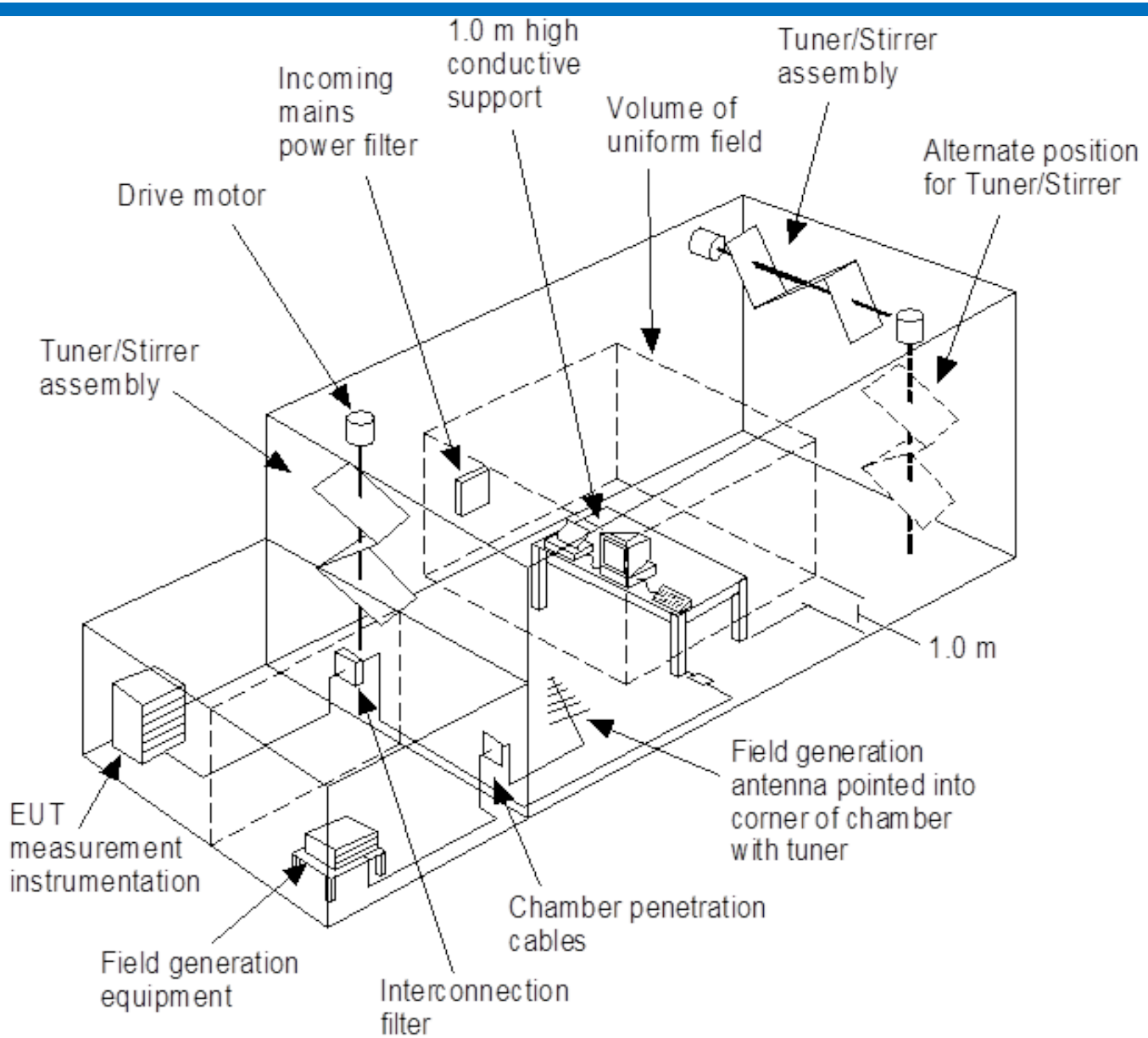

Could also have:

- Receiving Antenna
- Wall mounted sensors/antennas
- 3-axis probe (with extreme caution/not recommended when stirring).

For Static Conditions

For fixed paddle positions, source locations, sensor locations, and CW excitation:

- Static Fields
- Standing Waves
- Theoretically Calculable from Maxwell's Equations

For Different Conditions

"Small" static changes in conditions give "small" changes in fields

"Sufficiently large" changes give essentially "random" and independent fields.

- N_{ind} "independent samples" per paddle rotation.
- N_{ind} increases with frequency.
- N_{ind} generally increases with chamber size.

Example “Paddle Sweep”

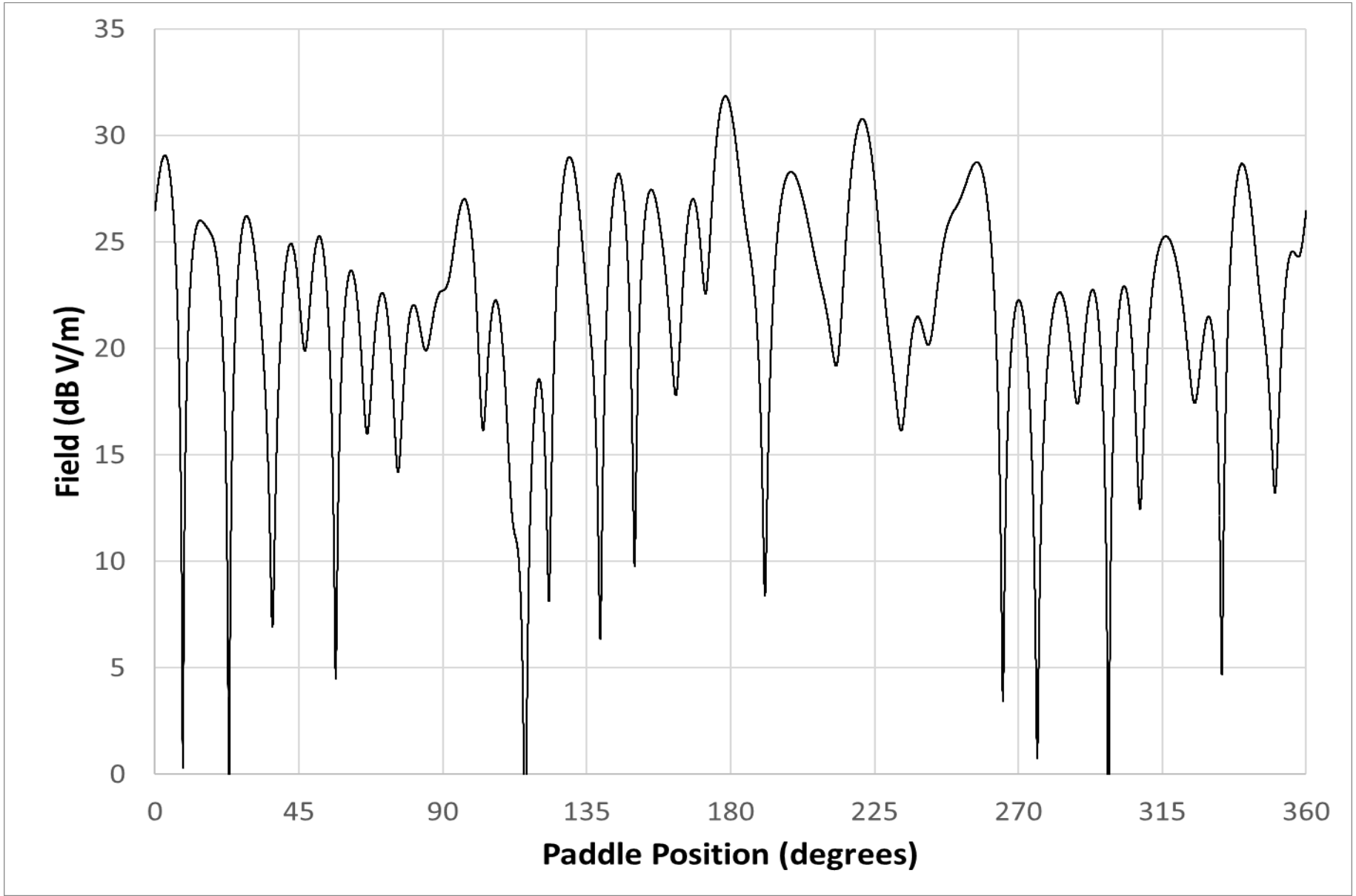

More on Samples

- For stepping:
  - Less than N_{ind} samples has relatively simple statistical models and measurement support.
  - More than N_{ind} samples is much more complicated and has less support.

- For stirring:
  - Many more than N_{ind} samples.
  - Introduces both amplitude and phase modulation.
  - ***Varies from chamber to chamber.***

Reverberation Chamber Basics

Field measured with 3-axis probe

E_x, E_y, E_z … rect. component E_R

Approximately equal and uniform

Total Field = $E_T = \sqrt{E_x^2 + E_y^2 + E_z^2}$

$\langle E_T^2 \rangle \approx 3 \langle E_R^2 \rangle$ 4.77 dB higher

$\langle |E_T| \rangle \approx \frac{15}{8} \langle |E_R| \rangle$ 5.46 dB higher

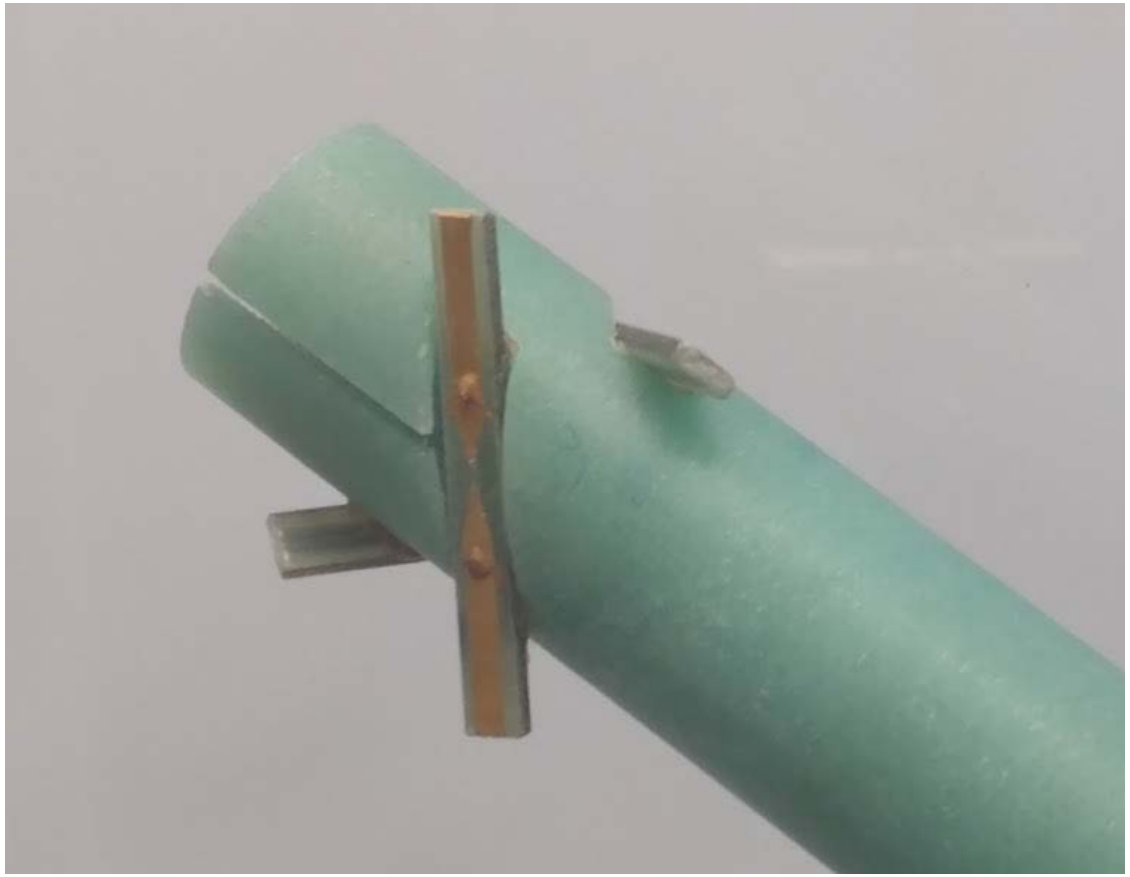

Reverberation Chamber Basics

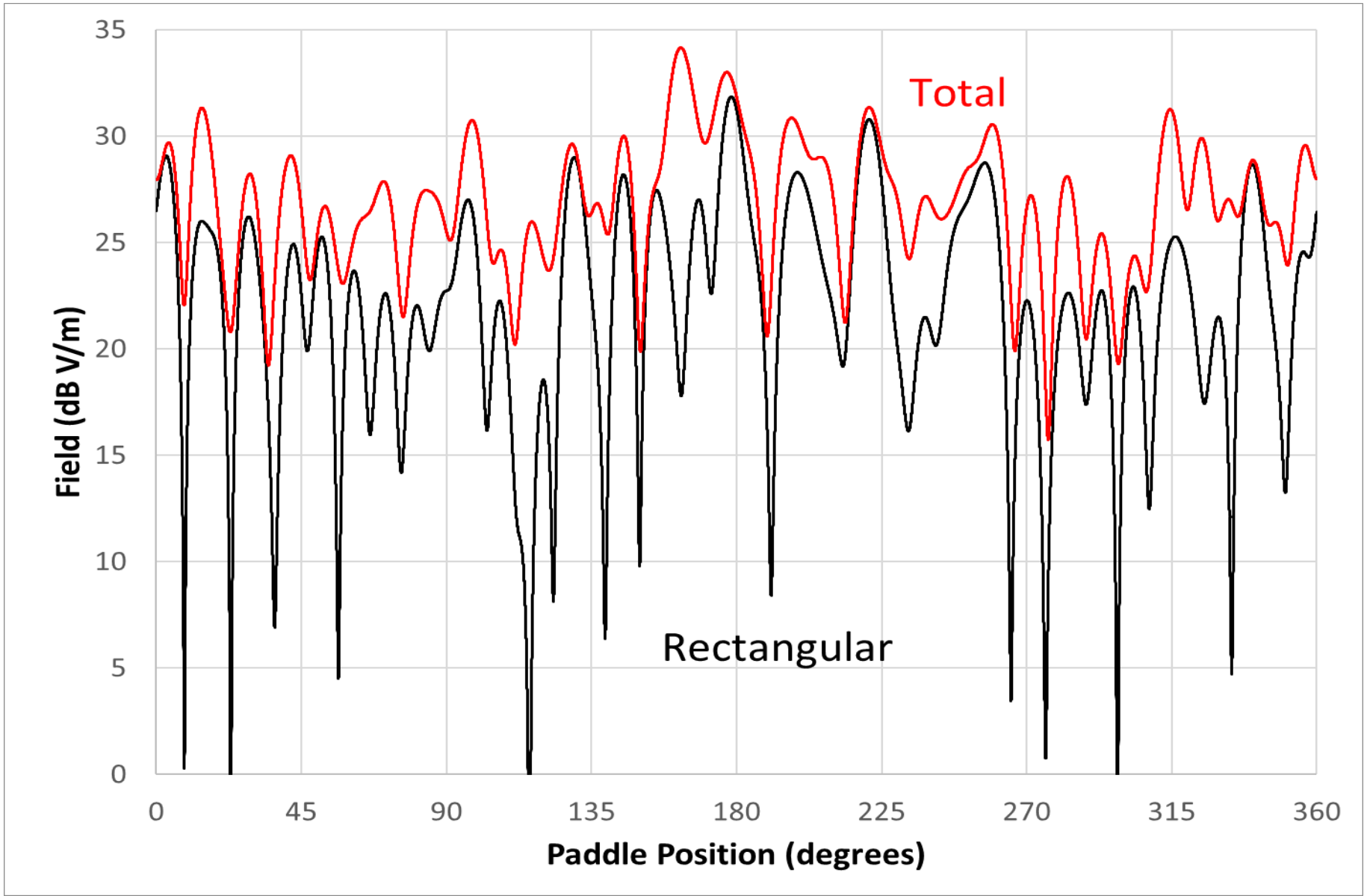

Reverberation Chamber Basics

By central limit theorem (and a whole lot of hand-waving)

E_x, E_y, E_z : Real and imaginary parts are normally distributed, with same mean (0) and variance.

E_R^2 has exponential or χ_2^2 distribution.

E_R has Rayleigh or χ_2 distribution.

E_T^2 has χ_6^2 distribution.

E_T has χ_6 distribution.

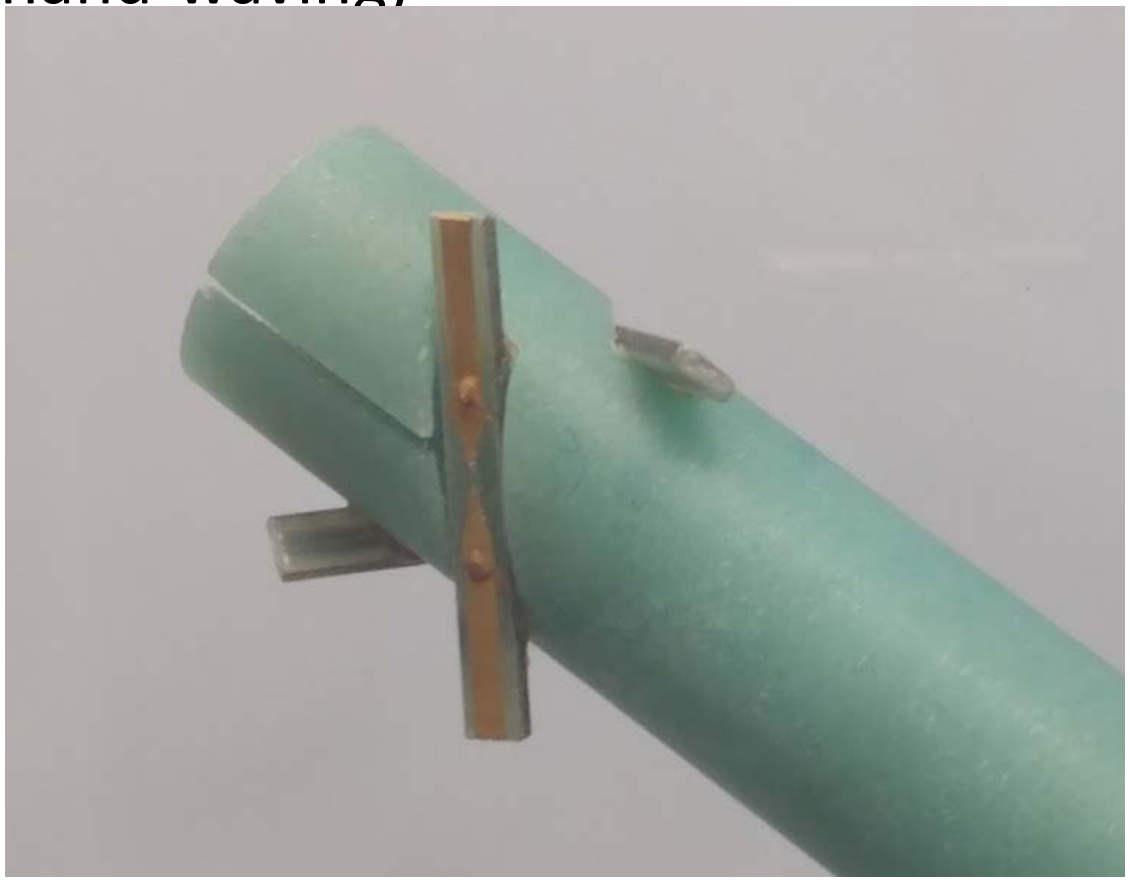

Reverberation Chamber Basics

For any linear antenna:

Received power has exponential or χ_2^2 distribution.

Terminal voltage or current has Rayleigh or χ_2 distribution.

Consistent with rectangular or Cartesian field

*Note: Received power < Transmitted power. For low-loss chambers (usually below 1 GHz), upper tail of distributions will be compressed. Be careful using an antenna to monitor fields at low frequencies

Which Field to Use: Total vs. Rectangular

100 V/m Total < 100 V/m Rectangular

So which to use?

- Still no conclusive decision
- Rectangular is more thorough (is that good?)
- Total could allow for smaller amplifiers.

To be addressed later.

Once upon a time…

IEC 61000-4-21	RTCA DO-160
• 8 Probe Positions	• 9 Probe Positions
• Rectangular Field	• Total Field
• Stepped paddle	• Stirred paddle

Stirring vs Tuning (perceived characteristics)

Tuning (stepped operation)	Stirring (continuous motion)
Slow	Fast
Stable	More thorough
Reliable	Simple
Strong theoretical support	Higher fields
Good measurement support	More accurate

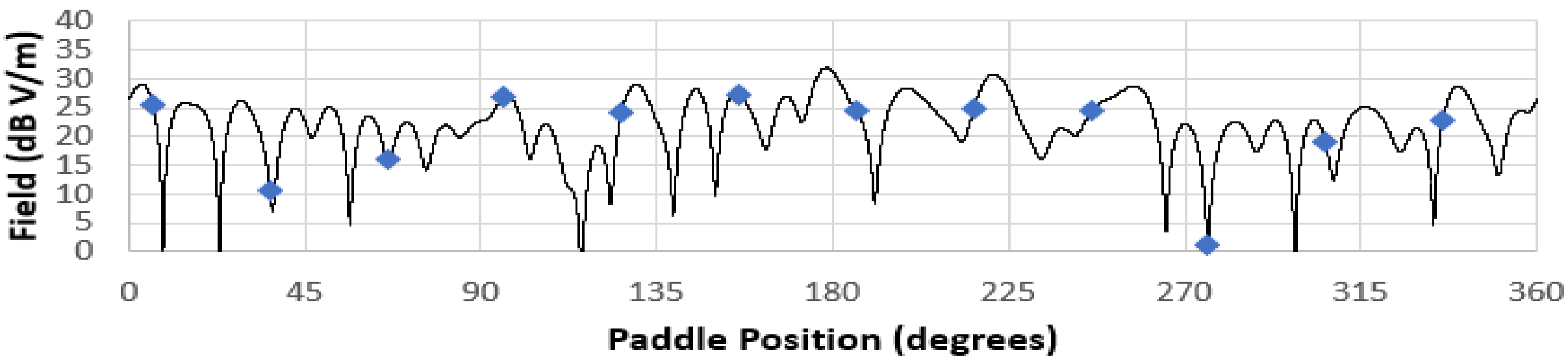

Points to ponder?

Why no probes in a stirred chamber?

Slow, filtered, smoothed…

Stirring Implies FAST DUT Response

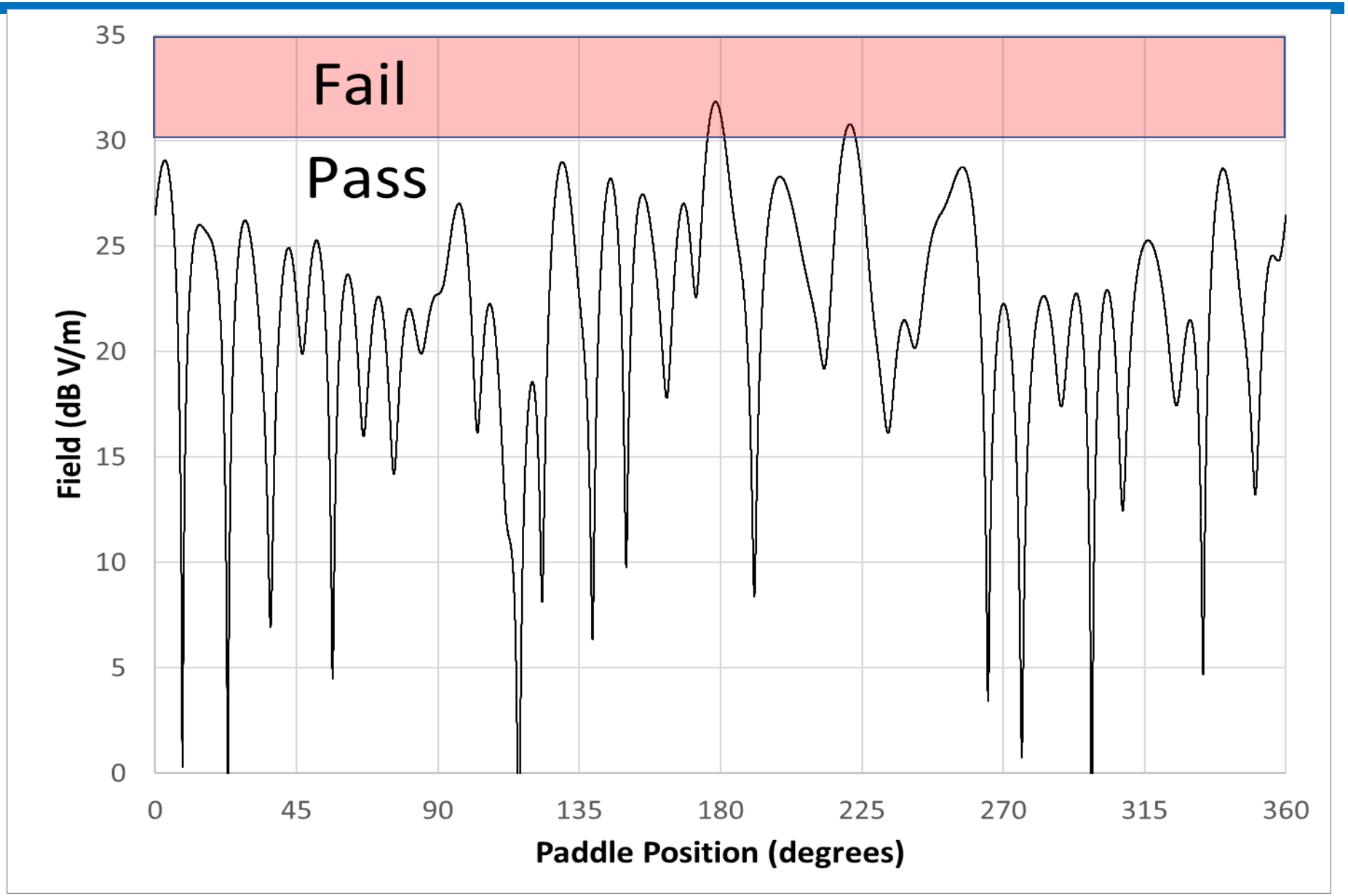

DO-160 allows for "Response Time"

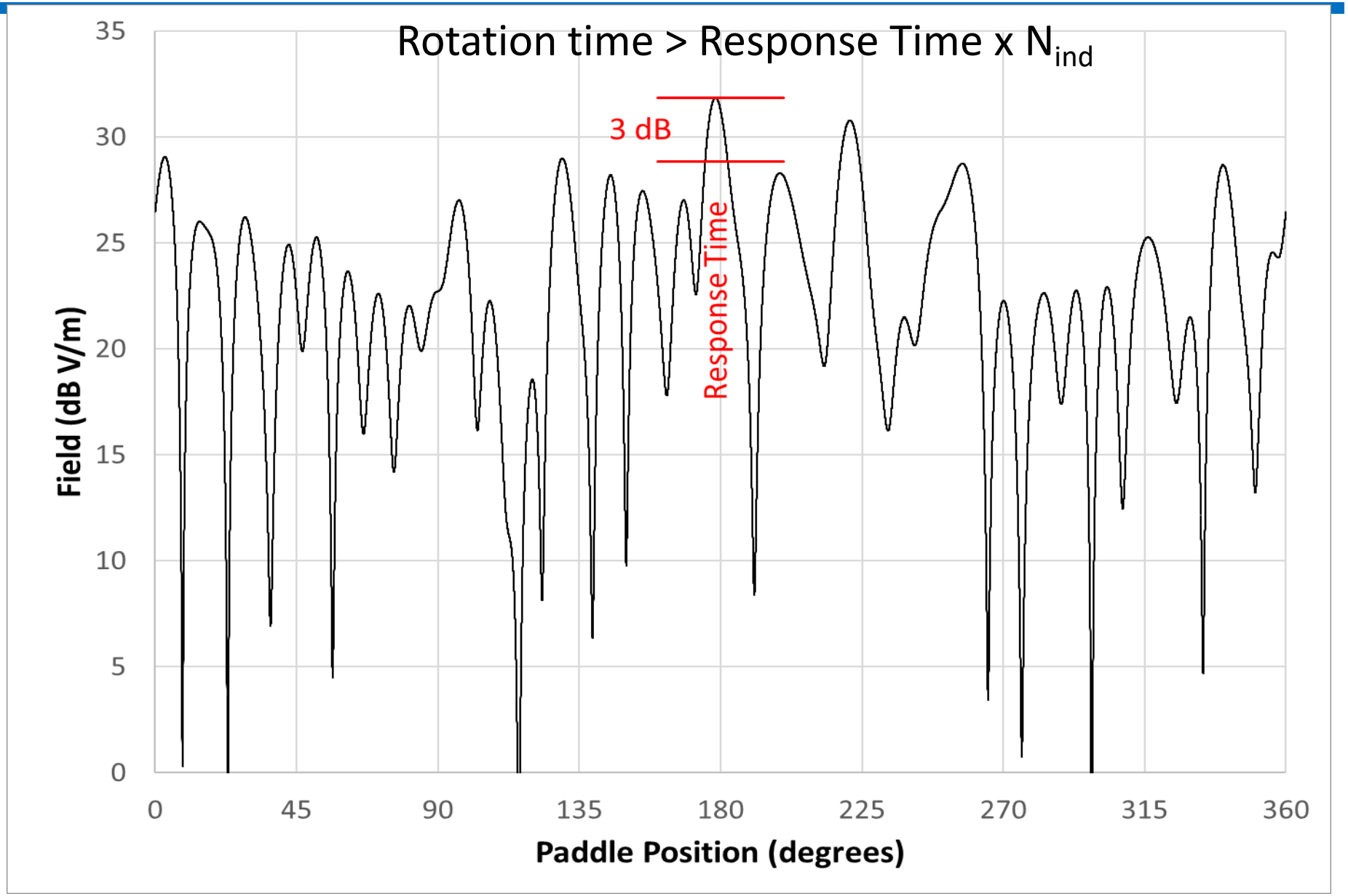

Response Time Considerations

- Rotation rate slow enough that DUT is exposed to peak field (within 3 dB) for duration of response time.
- Peak width (and therefore rotation rate) decreases ~proportionally with frequency.
- Rotation rate will depend on: frequency, chamber size, response time

Challenge Time

Let’s Design Problem EUTs

EUT Considerations

- Does EUT fail due to high field, or a change in field?
- Does EUT "lock up" on failure, or can it self recover?
  - If it self recovers, could a failure be missed?
- Does EUT have error detection/correction systems?
- Could EUT failure be an RF-induced thermal effect?

Bad Candidates for Stirring

- Many RF Field probes are great "bad candidates" for stirring
  - Slow response time (~100 ms)
  - Heavily filtered/smoothed
  - Slow sample rate

The Problem with Slow

- Assume a chamber with N_{ind} = 100 at 1 GHz
- Assume response time τ = 100 ms

- Test requires about $N_{ind} \times \tau$ = 10 s, or rotation rate of < 6 RPM

- At 18 GHz, $N_{ind} \approx 1800$, test requires 180 s (3 min), rotation rate of < 0.33 RPM

The Problem with Filtering

- Filtering at test frequency is good
- Filtering of modulations can be bad

- Can significantly reduce the test level

The Problem with Sampling

- With stepping, test level increases with number of samples, even though same power is applied.
- Same thing applies to stirring with a device that samples.
- *Field level to which a DUT is exposed depends on the DUT sample rate!*
- What if EUT is made of multiple DUTs, each with different sample rates?

But my system doesn't sample…

- For a digital logic system with a clock, voltages on a chip pin only matter during a clock pulse. This is sampling.
- Are there any true analog systems in use anymore?

Bad Candidates for Stirring

- What else?

Points to ponder?

What if you don’t know how your DUT behaves?

Conclusions

- Stirring can be a fast and efficient test method.
- Requires solid knowledge of EUT.
- Test exposures can vary from chamber to chamber.
- Test levels can depend on the EUT, not just the controlled variables.