The Power of Creativity ™

BMMA INTERFACE

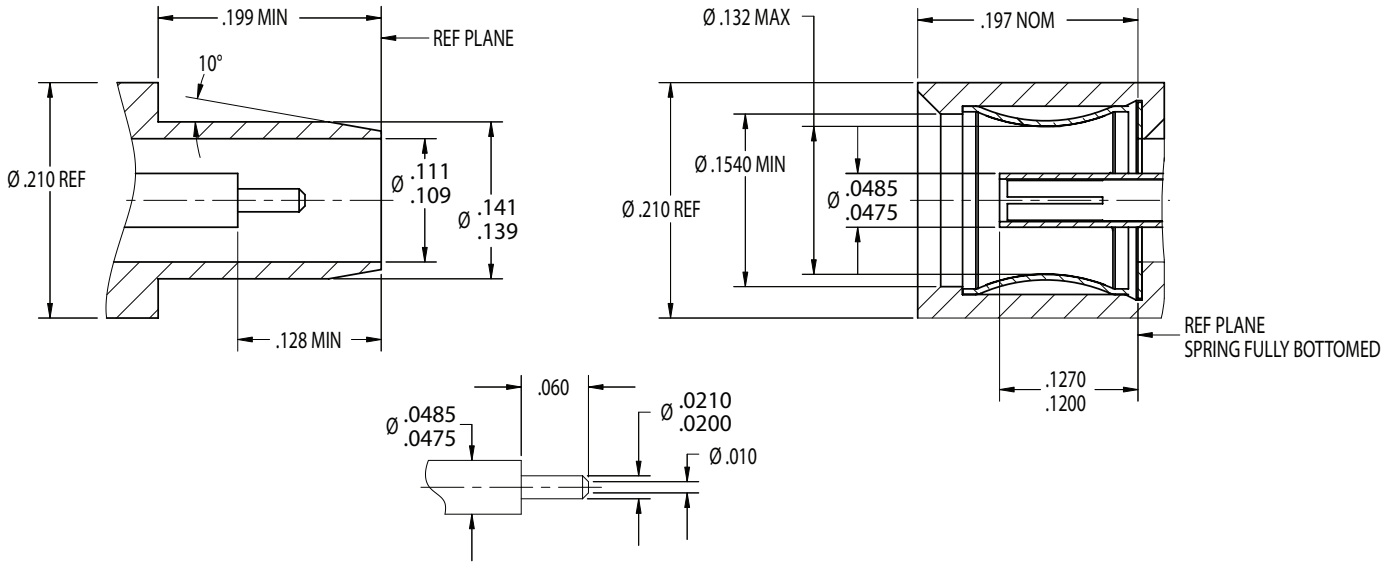

ELECTRICAL

Nominal Impedance	50 ohms
Frequency Range	DC to 28 GHz
Voltage Rating	335 volts rms
Dielectric Withstanding Voltage	675 volts rms

MECHANICAL

Mating Characteristics	per TRU Standards
Connector Durability	500 cycles min.
Recommended Torque	N/A (Push-on Blind-mate)

ENVIRONMENTAL

Temperature Range	-85°Fto +257°F (-65°C to +125°C)
Vibration	MIL-STD-202 Method 204
Shock	MIL-STD-202 Method 213
Moisture Resistance	MIL-STD-202 Method 106
Corrosion (salt spray)	MIL-STD-202 Method 101

MATERIALS / FINISHES

Body	Brass, Silver or Nickel Plated. Stainless Steel, Passivate
Contacts (Inner)	Female: Beryllium Copper, Silver or Gold Plated. Male: Brass, Silver or Gold Plated
Contacts (Outer)	Brass, Silver or Nickel Plated
Contacts (Slotted)	Beryllium Copper, Silver or Nickel Plated
Insulators	Teflon
Gaskets & Seals	Silicone Rubber

TRU Corporation

245 Lynnfield Street, Peabody, MA 01960 1-800-COAX-TRU (1-800-262-9878) www.trucorporation.com